Copeland
brand products

Spare Parts List

3DC5 - 75X/750

EMERSON

3DC5 - 75X/750

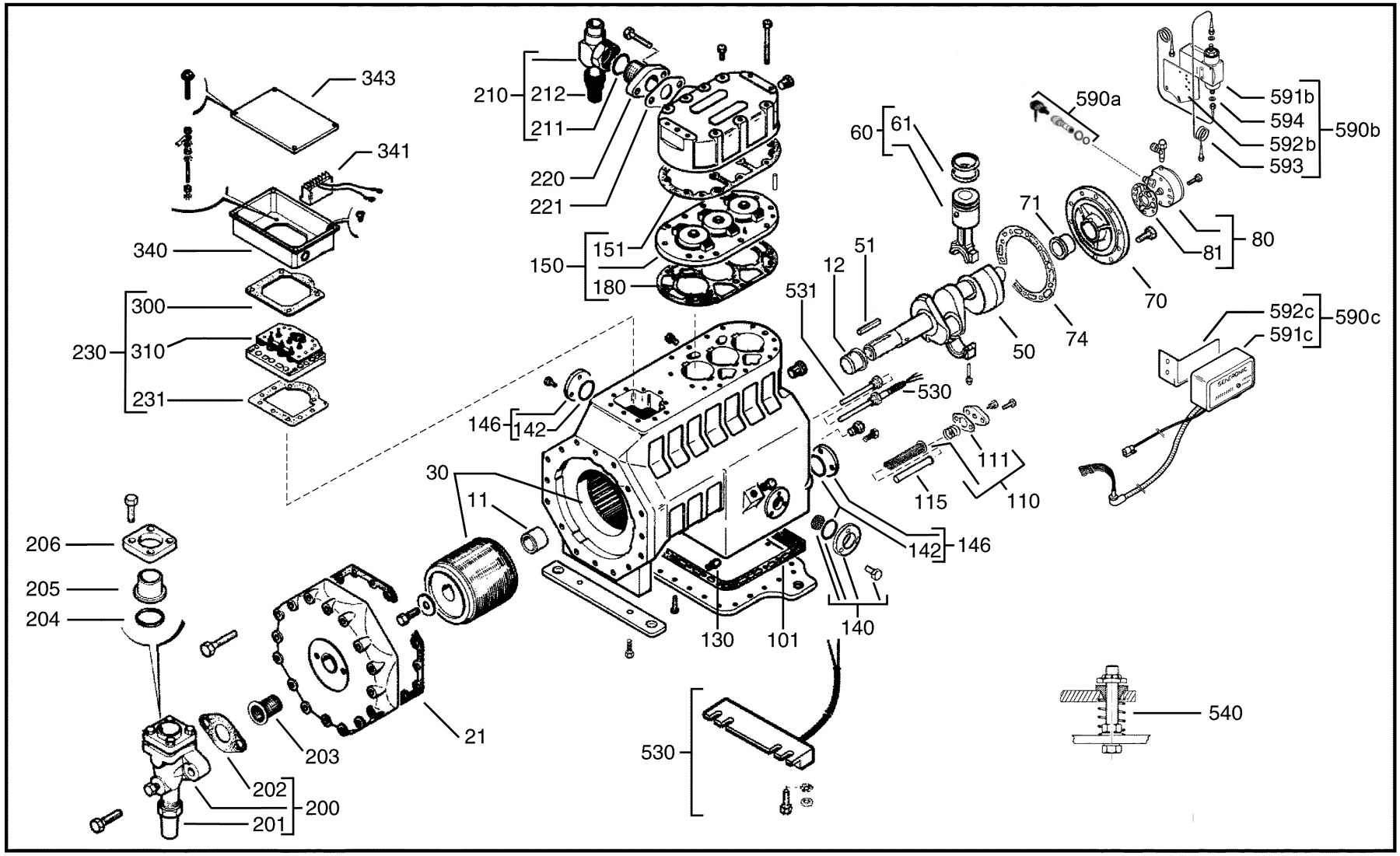

Spare parts lists are subject to change without notice. If in any doubt, please contact your local Emerson Climate Technologies representative.

3DC5 - 75X/750

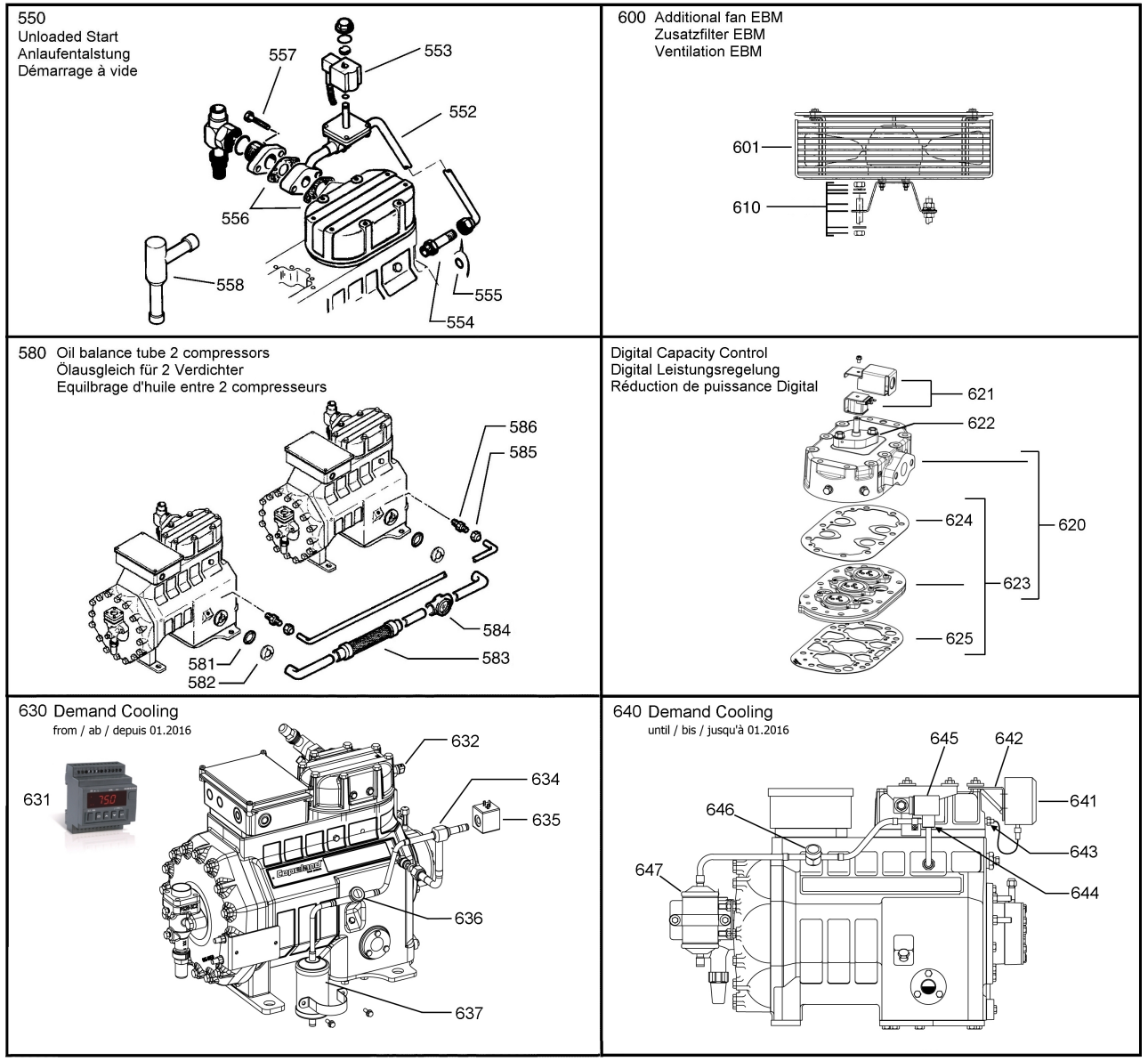

Spare parts lists are subject to change without notice. If in any doubt, please contact your local Emerson Climate Technologies representative.

3DC5 - 75X/750

Pos No.	Ident No.	Description	Qty	Technical information	Additional information	Comments	Replaced by
11	3222705	Bearing	1		Body Main, Motor Side		
12	3223220	Bearing	1		Body Main, Thrust, Gear Side (Teflon)		
21	2951411	Gasket: stator cover	1				
30	4566380	Motor unit: 7,5HP AWM/D or 45/55	1				
30	2569156	Motor unit: 7,5HP EWM/D	1				
30	2569145	Motor unit: 7,5HP EWL/N	1				
30	2569190	Motor unit: 7,5HP EWK	1				
50	2938001	Crankshaft	1				
51	2048946	Crankshaft key	1				
60	2836230	Piston & conrod assy	1		3 Pieces		
61	2972154	Piston ring	6				
70	3192186	Housing cover w bearing	1				
71	3240187	Bearing	1		Housing Cover		
74	2959368	Gasket: housing cover	1				
80	2832761	Oil pump assy	1				
81	2993488	Gasket: oil pump	1				
	2947601	O-ring: oil pump	1		IOPS/OPS1/Sentronic		
101	2993499	Gasket: bottom plate	1				
110	3806741	Oil screen w gasket	1				
111	2993455	Gasket	1			for oil screen	
115	2882722	Sleeve: oil screen	1				
130	2852661	Check Valve: oil	1				
140	2482519	Oil sight glass assy	1				
142	2042028	Gasket	3			for oil sight glass & blind flange	
146	3805895	Blind flange w gasket	2			Instead Of Oil Sight Glass	
150	2998609	Valve plate kit w gaskets	1				
	2998665	Gasket kit for valve plate	1				
151	2937893	Gasket: below cylinder head	1				
180	3169208	Gasket: below valve plate	1	0.033"			
180	3169220	Gasket: below valve plate	1	0.037"			
180	3002969	Gasket: below valve plate	1	0.039"			
200	2837062	Shut-off valve w gasket & w/o bolts	1	1 3/8"	Brazed	Suction	
201	2943676	Valve cap	1		for AWA & Nobis	Suction	
202	2963043	Gasket	1			Suction	
203	3806752	Suction screen w gasket	1				
204	3199972	Gasket: pipe socket	1				
205	2048060	Solder sleeve	1	1 3/8"			

Spare parts lists are subject to change without notice. If in any doubt, please contact your local Emerson Climate Technologies representative.

3DC5 - 75X/750

Pos No.	Ident No.	Description	Qty	Technical information	Additional information	Comments	Replaced by
206	3011661	Flange	1	1 3/8"			
200	2837119	Shut-off valve w gasket & w/o bolts	1	2 1/8"	Brazed	Suction, Tandem	
201	2943698	Valve cap	1			Suction, Tandem	
202	2880862	Gasket	1			Suction, Tandem	
204	3163777	Gasket: pipe socket	1			Tandem Compressor	
205	2832841	Pipe socket	1	2 1/8"		Tandem Compressor	
206	2946846	Flange	1			Tandem Compressor	
210	2837131	Rotalock valve & gasket	1	1 3/4" - 12, I.D. 1 1/8"		Discharge	
211	2050772	Gasket	1	1 1/2" (Teflon)		Discharge	
212	2943676	Valve cap	1		for AWA & Nobis	Discharge	
	2846082	Shipping plate kit	1		W Gaskets & Screws	Suction	
	2846082	Shipping plate kit	1		W Gaskets & Screws	Discharge	
220	2050749	Mounting Flange for rotalock valve without gasket	1				
221	2880908	Gasket	1			for flange	
230	2834596	Terminal plate assy with gasket	1				
231	2952823	Gasket: terminal plate	1		Tandem & Parallel Systems		
300	2938385	Gasket: terminal box	1				
310	2939866	Terminal plate	1	Bakelite			
340	2938250	Terminal box	1				
341	3216455	Module: thermistor protection	1	Kriwan INT69-2 115V / 230V Internal (standard)			
341	3161191	Module: thermistor protection	1	Kriwan INT69 24V DC	Internal		
341	3161204	Module: thermistor protection	1	Kriwan INT69 24V AC	Internal		
341	3237201	Module: thermistor protection	1	Kriwan INT69 200-260V AC (export)	Internal		
343	3237994	Cover: terminal box	1	EWL/M/D/K/Y +TWY/X		EW*, TW*	
343	2945503	Cover: terminal box	1				
510	2998621	Gasket kit	1				
530	4577420	Crankcase heater	1	65W, 240V	External		
530	4577431	Crankcase heater	1	65W, 120V	External		
530	4577442	Crankcase heater	1	65W, 480V	External		
530	3210162	Crankcase heater	1	70W 230V 50/60Hz	Internal		
530	6717946	Crankcase Heater	1	70W, 115V	Internal		
530	3806310	Crankcase heater	1	70W, 480V	Internal		
531	2948091	Sleeve for Crankcase heater	1				
	2942537	Heat sink paste tube 8-12gr.	1		For Crankcase Heater, NTC Sensor		
540	2188748	Mounting parts kit	1				3231781

Spare parts lists are subject to change without notice. If in any doubt, please contact your local Emerson Climate Technologies representative.

3DC5 - 75X/750

Pos No.	Ident No.	Description	Qty	Technical information	Additional information	Comments	Replaced by
545	2933266	Mounting parts kit (rubber for parallel)	1				
550	2833991	Unloaded start wo check Valve with Coil	1	220V, 50/60Hz			
550	2990105	Unloaded start wo check valve with coil	1	110V, 50/60Hz			
550	2990207	Unloaded start wo check valve with coil	1	24V, 50Hz			
550	2990309	Unloaded start wo check valve with coil	1	24V DC			
552	3199154	Unloaded start piping assy	1		Wo Coil, Wo Gaskets		
553	2940235	Solenoid coil	1	220V AC, 50/60Hz	Ul Start		
553	2940246	Solenoid coil	1	110V AC, 50/60Hz	Ul Start		
553	2940257	Solenoid coil	1	24V AC, 50Hz	Ul Start		
553	2940268	Solenoid coil	1	24V, DC	Ul Start		
554	2944204	Adaptor rotalock UL Start	1				3211143
555	3163788	Gasket	1	3/4" (Teflon)		for adaptor rotalock	
556	2963043	Gasket	2			Flange, Discharge	
557	2040588	Bolt	2				
558	2995906	Check valve NRV22S	1	1"1/8 / 28 mm			
558	2995600	Check valve NRVH22S	1	1"1/8 / 28 mm			
580	5401813	Oil & gas equalization kit: 1 comp	1				
581	2496330	Flange: sweat	2				
582	2042028	Gasket	2				
583	6744780	Vibration absorber	1	1 1/8"			
584	2495882	Oil sight glass	1	AMI-1TT9, 1-1/8", ALCO (#805651)			
585	2038456	Cap nut	2				
586	2063909	Socket: insert	2				
	3131507	OM3-CUA Traxoil electronic oil level management system Kit includes: OM3 Traxoil, CUA adapter, 24V coil ,relais cable 6m, power cable 6m	1	35 bar			
	8527518	Transformer	1	230 V / 24 VAC, 20 VA	ETC-523 ALCO (804332)		
	3131472	Differential Oil Check Valve	1	3,5 Bar	ODP-33A - #800366		
588	2948433	Oil balance tube: tandems	1				
590a	5404652	Oil pressure switch with PG: OPS2	1	115/230 V, 50/60 Hz	Switch, PG connection		
590a	3168329	Oil pressure switch complete: OPS2	1	115/230V, 50/60 Hz	Sensor, switch, PG connection		
590a	3164918	Oil pressure switch: OPS2	1	115/230 V, 50/60 Hz	Electronic switch		
	3140721	Electronic switch OPS1 - Obsolete	1	230 V, 50/60 Hz	Electronic switch		3164918

Spare parts lists are subject to change without notice. If in any doubt, please contact your local Emerson Climate Technologies representative.

3DC5 - 75X/750

Pos No.	Ident No.	Description	Qty	Technical information	Additional information	Comments	Replaced by
	3112586	Gasket, oil sensor	1	Cu			
	2944124	O-ring: oil sensor	1				
	3110784	Sensor w gaskets: OPS1/OPS2	1				
	3112348	PG screw connection kit OPS	1				
	3112268	Protection cap: reset button OPS1	1				
590b	3192153	Oil pressure switch w 2 Capillary Tubes - For UL start/Capacity Control	1	ALCO FD113 ZU	B		
591b	2966622	Oil pressure switch	1	ALCO FD113 ZU	Wo Capillary Tubes & Bracket		
	2942300	Oil pressure switch	1	ALCO FD113 ZU	W 2 Capillary Tubes & Wo Bracket		
592b	3192164	Bracket: oil pressure switch	1	B	For Comps W Cap Control Or Ul Start		
593	3808214	Capillary tube w gasket: oil safety switch	2				
594	2974343	Gasket: Cu ring	4				
590c	3192142	Oil pressure switch	1	SENTRONIC	W Black Bracket & Sensor		
591c	3007704	Oil pressure switch: SENTRONIC 3	1		Wo Bracket & Sensor		
592c	3192175	Bracket: oil safety switch	1		Black		
	2944124	O-ring: oil sensor	1				
	2951831	Gasket: sensor SENTRONIC	1				
	3107046	Sensor w gaskets: SENTRONIC	1				
	3107035	Extension cable: SENTRONIC	1				
600	3188729	Fan assy: vertical: EBM	1	220V/380V-3-50Hz; B	w Mounting parts	not for Digital	
600	3188730	Fan assy: vertical: EBM	1	220V-1-50Hz; B	w Mounting parts	not for Digital	
600	3188741	Fan assy: vertical: EBM	1	500V-3-50Hz; B	w Mounting parts	not for Digital	
600	3188752	Fan assy: vertical: EBM	1	220/380V-3-50/60Hz; B	w Mounting parts	Digital & Moduload	
600	3188763	Fan assy: vertical: EBM	1	220V-1-50Hz; B	w Mounting parts	Digital & Moduload	
600	3188774	Fan assy: vertical: EBM	1	500V-3-50Hz; B	w Mounting parts	Digital & Moduload	
601	2998256	Fan assy: vertical: EBM	1	220/380V-3-50/60Hz	Wo Mounting Kit		3258933
601	2998245	Fan assy: vertical: EBM	1	220V-1-50Hz	Wo Mounting Kit		
601	2998267	Fan assy: vertical: EBM	1	500-3-50Hz	Wo Mounting Kit		
610	3192051	Mounting kit: EBM fan	1	B			
610	3192040	Mounting kit: EBM fan	1	B		Digital & Moduload	
	3097996	Capacitor 5 µF	1	5 µF / 400 V, 50 Hz	For Fan 220-1-50/60 Ebm		
620	3201562	Digital conversion kit - Inactive	1	3DC-7,5HP	wo Control Valve, wo Coil		
621	3185504	Solenoid coil w cable	1	220-240 VAC Digital			
621	3185491	Solenoid coil w cable	1	120 VAC Digital			
621	3185480	Solenoid coil w cable	1	24 VAC Digital			

Spare parts lists are subject to change without notice. If in any doubt, please contact your local Emerson Climate Technologies representative.

3DC5 - 75X/750

Pos No.	Ident No.	Description	Qty	Technical information	Additional information	Comments	Replaced by
622	3196837	Control valve w gasket	1	Digital 3D			
	3196826	Gasket	1	3D Digital			
623	3196860	Valve plate kit w gaskets	1	Digital 3DC 7.5HP			
624	3169220	Gasket: below valve plate	1	0.037"			
625	3009868	Gasket: below cylinder head	1	D3D*D1			
	8405187	Kit EC3-D13 driver for solenoid valve digital scroll	1		including EC3-D13 driver, display, cable, transformer		
630	3208803	Kit Demand Cooling	1	XEV01D	3DA-50,3DC-75	from 01.2016	
631	3199110	Module: demand cooling	1	XEV01D		from 01.2016	
632	3207786	Temperature sensor w plug	1	4/6M	Demand Cooling	from 01.2016	
634	3189959	Expansion valve w/o coil	1	EX2-I00, Alco #801090		from 01.2016	
	3223059	Orifice	1	EXO-001, Alco #801086		from 01.2016	
635	3252242	Solenoid coil	1	230V AC, 50/60Hz, Alco 801064		from 01.2016	
636	3196575	Sight Glass	1	Alco #805884		from 01.2016	
637	2959380	Filter drier ALCO	1	ADK1610MMS (003616)		from 01.2016	
640	3188887	Demand cooling assy - OBSOLETE	1	240V	Black	until 01.2016	3208803
641	3004067	Module: demand cooling	1	240 V		until 01.2016	
643	2954330	Temperature sensor w cable length 1m	1	Demand Cooling		until 01.2016	
	3103840	Expansion valve w solenoid coil	1	240V		until 01.2016	
644	2954396	Expansion valve w/o coil - Parker	1		for Demand Cooling	until 01.2016	
645	2954409	Solenoid coil Parker	1	220V AC, 50/60Hz		until 01.2016	
	2982291	Piping: complete ALCO	1	60 Hz		until 01.2016	
646	3196575	Sight Glass	1	Alco #805884		until 01.2016	
647	2959380	Filter drier ALCO	1	ADK1610MMS (003616)		until 01.2016	
	2830743	Spray Black	1	RAL 9005, 400ml			
	3011489	Paint RAL9005, 6 x 400ml	1				
	2190814	Semi synthetic oil - OBSOLETE	1	SHELL CLAVUS SD 22-12			
	3103953	Mineral oil	1	Suniso 3GS, 4 Liter			
	3139330	Ester oil	1	RL32-3MAF, 1Lt			
	3139341	Ester oil	1	RL32-3MAF, 5Lt			
	3139352	Ester oil	1	RL32-3MAF, 20Lt			

Spare parts lists are subject to change without notice. If in any doubt, please contact your local Emerson Climate Technologies representative.