Copeland™
brand products

Spare Parts List

D6TA*-150X/1500

EMERSON™

D6TA*-150X/1500

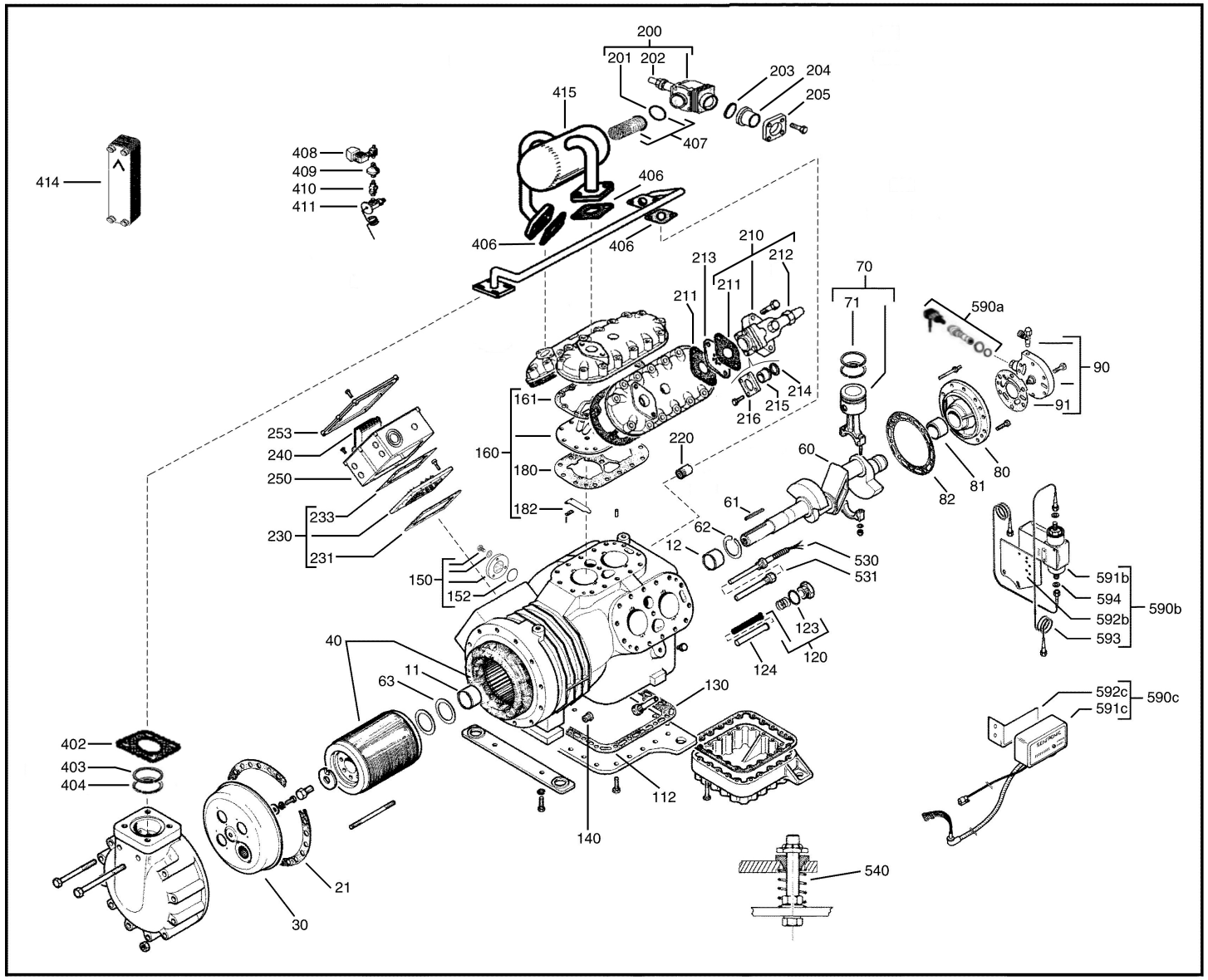

Spare parts lists are subject to change without notice. If in any doubt, please contact your local Emerson Climate Technologies representative.

D6TA*-150X/1500

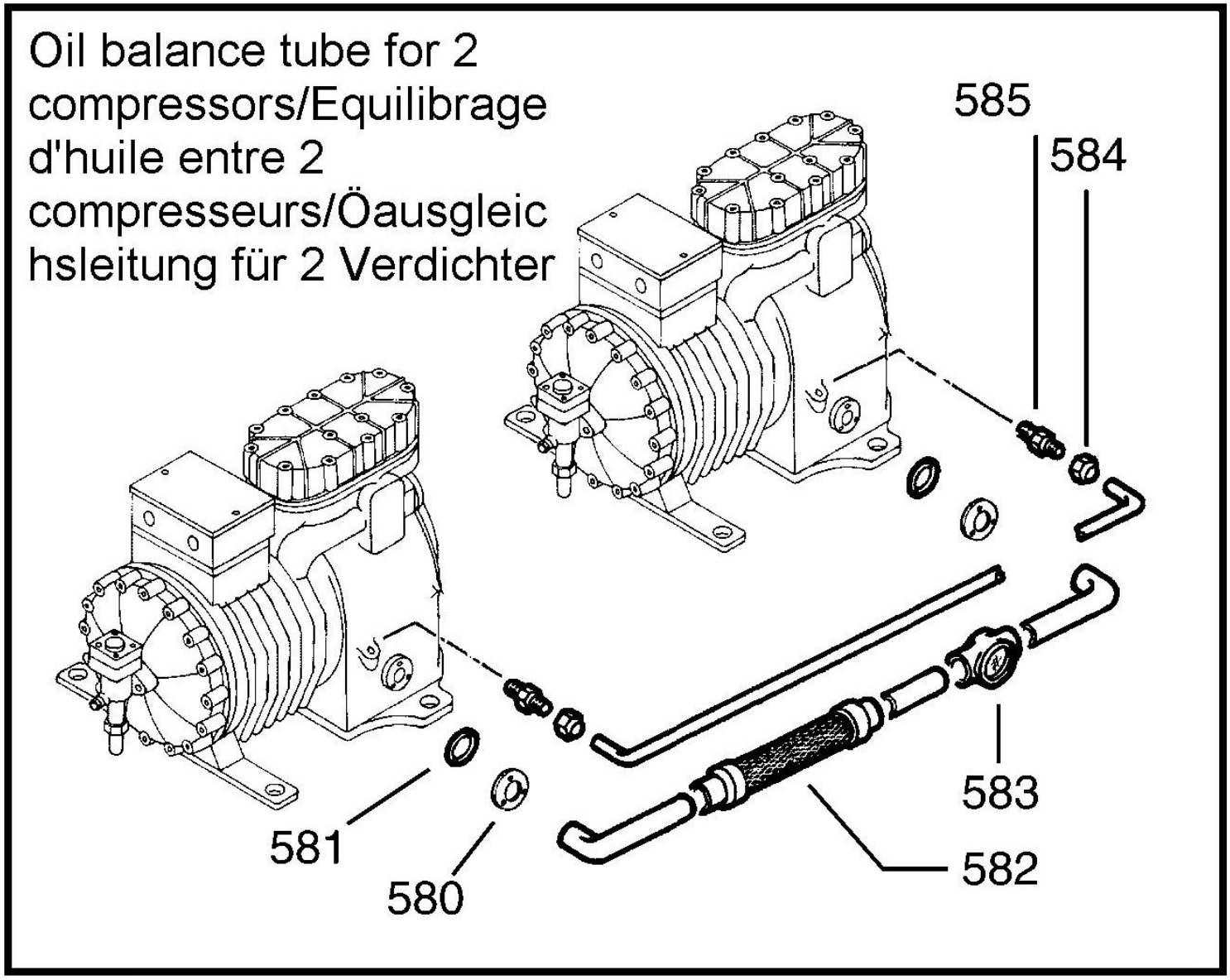

Spare parts lists are subject to change without notice. If in any doubt, please contact your local Emerson Climate Technologies representative.

D6TA*-150X/1500

Pos No.	Ident No.	Description	Qty	Technical information	Additional information	Comments	Replaced by
11	3223548	Bearing	1		Motor Side		
12	3223537	Bearing	1			Gear Side	
21	2882802	Gasket: stator cover	1				
40	3159616	Motor unit: 15/20HP AWM/D	1				
40	3159683	Motor unit: 15/20HP EWM	1				
40	3159672	Motor unit: 15/20HP EWL	1				
40	3159661	Motor unit: 15/20HP EWK	1				
40	3159638	Motor unit: 15/20HP AWR	1				
40	3159650	Motor unit: 15/20HP AWY	1				
40	3159649	Motor unit: 15/20HP AWX	1				
60	2050476	Crankshaft	1				
61	2940019	Crankshaft key	1				
62	2858556	Washer: open (gear side)	1				
63	2856823	Washer: closed (motor side)	1				
70	2836116	Piston & conrod assy	3		2 pieces		
71	2972074	Piston ring	12	4 A/F MOLY			
80	2885992	Housing cover w bearing	1				
81	3223537	Bearing	1			Housing Cover	
82	2884251	Gasket: housing cover	1				2880782
90	3121722	Oil pump assy	1				
91	2884262	Gasket: oil pump	1				
	2947601	O-ring: oil pump	1		IOPS/OPS1/Sentronic		
112	2883087	Gasket: bottom plate	1				
120	3806796	Oil screen w gasket	1		after 03.91		
123	3199949	Gasket: oil screen	1		after 03.91		
124	2882722	Sleeve: oil screen	1				
130	2895620	Check Valve: gas	1				
140	2862060	Check Valve: oil	1				
150	2482519	Oil sight glass assy	1				
152	2042028	Gasket	1			Oil Sight Glass	
160	2835828	Valve plate assy: LP stage, right cyl bank	1				
160	2835839	Valve plate assy: LP stage, central cyl bank	1				
160	2835840	Valve plate assy: HP stage, left cyl. bank	1				
	3805442	Gasket kit for valve plate	3				
161	2975197	Gasket: below cylinder head HP	1				
161	6610909	Gasket: below cylinder head	2		LP, for 2 stage		

Spare parts lists are subject to change without notice. If in any doubt, please contact your local Emerson Climate Technologies representative.

D6TA*-150X/1500

Pos No.	Ident No.	Description	Qty	Technical information	Additional information	Comments	Replaced by
180	2528762	Gasket: below valve plate	3	0.026"			
182	2836774	Valve plate parts: Suction Reed, Pad, Pin	3				
200	2837084	Shut-off valve w gasket & w/o bolts	1	1 5/8"	1 5/8" Brazed	Suction	
201	2880851	Gasket	1			Suction Sov	
202	2943687	Valve cap	1			Suction Sov	
203	2881467	Gasket: pipe socket	1				
	2880895	Gasket: pipe socket Henry	1		Henry		
204	2938830	Pipe socket	1	1 5/8"			
	2938829	Pipe socket Henry - Obsolete	1				
205	2050078	Flange for fitting adaptor Henry/Nobis	1				
210	2837062	Shut-off valve w gasket & w/o bolts	1	1 3/8"	Brazed	Discharge	
211	2829114	Gasket	2			Discharge Sov	
212	2943676	Valve cap	1		for AWA & Nobis	Discharge Sov	
213	2489510	Muffler	1				
214	3199972	Gasket: pipe socket	1				
215	2048060	Solder sleeve	1	1 3/8"			
216	3011661	Flange	1	1 3/8"			
	2846106	Shipping plate kit	1		W Gaskets & Screws	Suction	
	2846082	Shipping plate kit	1		W Gaskets & Screws	Discharge	
220	6611059	Pressure relief valve: internal	1				
230	2514225	Terminal plate assy	1				
231	2880840	Gasket: terminal plate	1				
	2865592	Terminal parts kit	1				
233	2938396	Gasket: terminal box	1				
240	3216466	Module: thermistor protection	1	Kriwan INT69TM2 115-230V (standard)	Internal		
240	3161259	Module: thermistor protection	1	Kriwan INT69TM 24V AC	Internal		
240	3161248	Module: thermistor protection	1	Kriwan INT69TM 24V DC	Internal		
240	3237198	Module: thermistor protection	1	Kriwan INT69TM, 200-260V	Internal		
250	2937757	Terminal box	1				
253	3237983	Cover: terminal box	1	IP54	for EW*, TW*, AW*		
402	2881172	Gasket: Manifold, 4 Hole Flange	1	6T			
403	2970625	O-ring: copper	1	Ø 64.3 / 82.5			
404	2880862	Gasket	1				
406	2829114	Gasket: Manifold And Suction Header	3	6T			
407	3806763	Suction screen w gasket	1			Low Pressure	
408	2998712	Solenoid valve with Coil	1	240 V	ALCO		

Spare parts lists are subject to change without notice. If in any doubt, please contact your local Emerson Climate Technologies representative.

D6TA*-150X/1500

Pos No.	Ident No.	Description	Qty	Technical information	Additional information	Comments	Replaced by
408	2998701	Solenoid valve with Coil	1	120 V AC	Alco		
408	2998698	Solenoid valve with Coil	1	24 V AC	Alco		
408	2998687	Solenoid valve with Coil	1	24 V DC	Alco		
409	3128676	Filter	1			Inter-Stage Injection	
410	3116475	Sight glass	1			Inter-Stage Injection	
411	6611048	Expansion valve: for use w subcooler	1	Sporlan BFVECC			
411	6611037	Expansion valve: for use wo subcooler	1	Sporlan BFVCC			
414	3207991	Subcooler w pipe, wo insulate	1				
414	6611253	Subcooler	1				
	3105766	Insulation kit: subcooler & pipework	1				
415	2955004	Tube: suction collector	1				
416	3208029	Intermedium pipe: for comps w subcooler	1				
416	6611231	Intermedium pipe: for comps wo subcooler	1				
510	3805497	Gasket kit	1				
530	3210093	Crankcase heater	1	100W, 230V	Internal		
530	4582584	Crankcase heater	1	100W, 115V	Internal		3210139
530	3210128	Crankcase heater	1	100W, 480V	Internal		
531	3211109	Sleeve: crankcase heater	1				
	2942537	Heat sink paste tube 8-12gr.	1		For Crankcase Heater, NTC Sensor		
540	3240869	Mounting parts kit: springs	1				
	2482315	Mounting parts kit (rubber) for parallel application	1		for flat bottom plate		
580	2496330	Flange: sweat	2				
581	2042028	Gasket	2			Flange Sweat	
582	6744780	Vibration absorber	1	1 1/8"			
583	2495882	Oil sight glass	1	AMI-1TT9, 1-1/8", ALCO (#805651)			
584	2038456	Cap nut	2				
585	2063909	Socket: insert	2				
	5401813	Oil & gas equalization kit: 1 comp	1				
	3131507	OM3-CUA Traxoil electronic oil level management system Kit includes: OM3 Traxoil, CUA adapter, 24V coil ,relais cable 6m, power cable 6m	1	35 bar		Replaces 8526719	
	8527518	Transformer	1	230 V / 24 VAC, 20 VA	ETC-523 ALCO (804332)		

Spare parts lists are subject to change without notice. If in any doubt, please contact your local Emerson Climate Technologies representative.

D6TA*-150X/1500

Pos No.	Ident No.	Description	Qty	Technical information	Additional information	Comments	Replaced by
	3131472	Differential Oil Check Valve	1	3,5 Bar	ODP-33A - #800366		
590a	3168329	Oil pressure switch complete: OPS2	1	115/230V, 50/60 Hz	Sensor, switch, PG connection		
	5404652	Oil pressure switch with PG: OPS2	1	115/230 V, 50/60 Hz	Switch, PG connection		
	3164918	Oil pressure switch: OPS2	1	115/230 V, 50/60 Hz	Electronic switch		
	3140721	Electronic switch OPS1 - Obsolete	1	230 V, 50/60 Hz	Electronic switch		3164918
	3112586	Gasket, oil sensor	1	Cu			
	2944124	O-ring: oil sensor	1				
	3110784	Sensor w gaskets: OPS1/OPS2	1				
	3112348	PG screw connection kit OPS	1				
	3112268	Protection cap: reset button OPS1	1				
590b	2834018	Oil pressure switch - complete	1	ALCO FD113 ZU	W Bracket & 2 Capillary Tubes		
591b	2966622	Oil pressure switch	1	ALCO FD113 ZU	Wo Capillary Tubes & Bracket		
	2942300	Oil pressure switch	1	ALCO FD113 ZU	W 2 Capillary Tubes & Wo Bracket		
592b	2039960	Bracket: oil safety switch	1		Alco Controls/Ranco		
593	3808214	Capillary tube w gasket: oil safety switch	2				
594	2974343	Gasket: Cu ring	4				
590c	2835419	Oil pressure switch SENTRONIC	1		complete kit with module, sensor, gaskets, cable, bracket		
591c	3007704	Oil pressure switch: SENTRONIC 3	1		Wo Bracket & Sensor		
592c	2884557	Bracket for SENTRONIC	1				
	2944124	O-ring: oil sensor	1				
	2951831	Gasket: sensor SENTRONIC	1				
	3107046	Sensor w gaskets: SENTRONIC	1			Caution! Obsolete And New Sentronic Parts, E.G. Obsolete Module With New Sensor, Must Not Be Used Commonly)	
	3107035	Extension cable: SENTRONIC	1			Caution! Obsolete And New Sentronic Parts, E.G. Obsolete Module With New Sensor, Must Not Be Used Commonly)	
	2190814	Semi synthetic oil - OBSOLETE	1	SHELL CLAVUS SD 22-12			
	3103953	Mineral oil	1	Suniso 3GS, 4 Liter			
	3139330	Ester oil	1	RL32-3MAF, 1Lt			
	3139341	Ester oil	1	RL32-3MAF, 5Lt			
	3139352	Ester oil	1	RL32-3MAF, 20Lt			

Spare parts lists are subject to change without notice. If in any doubt, please contact your local Emerson Climate Technologies representative.