Frascold®

W 40 142 Y

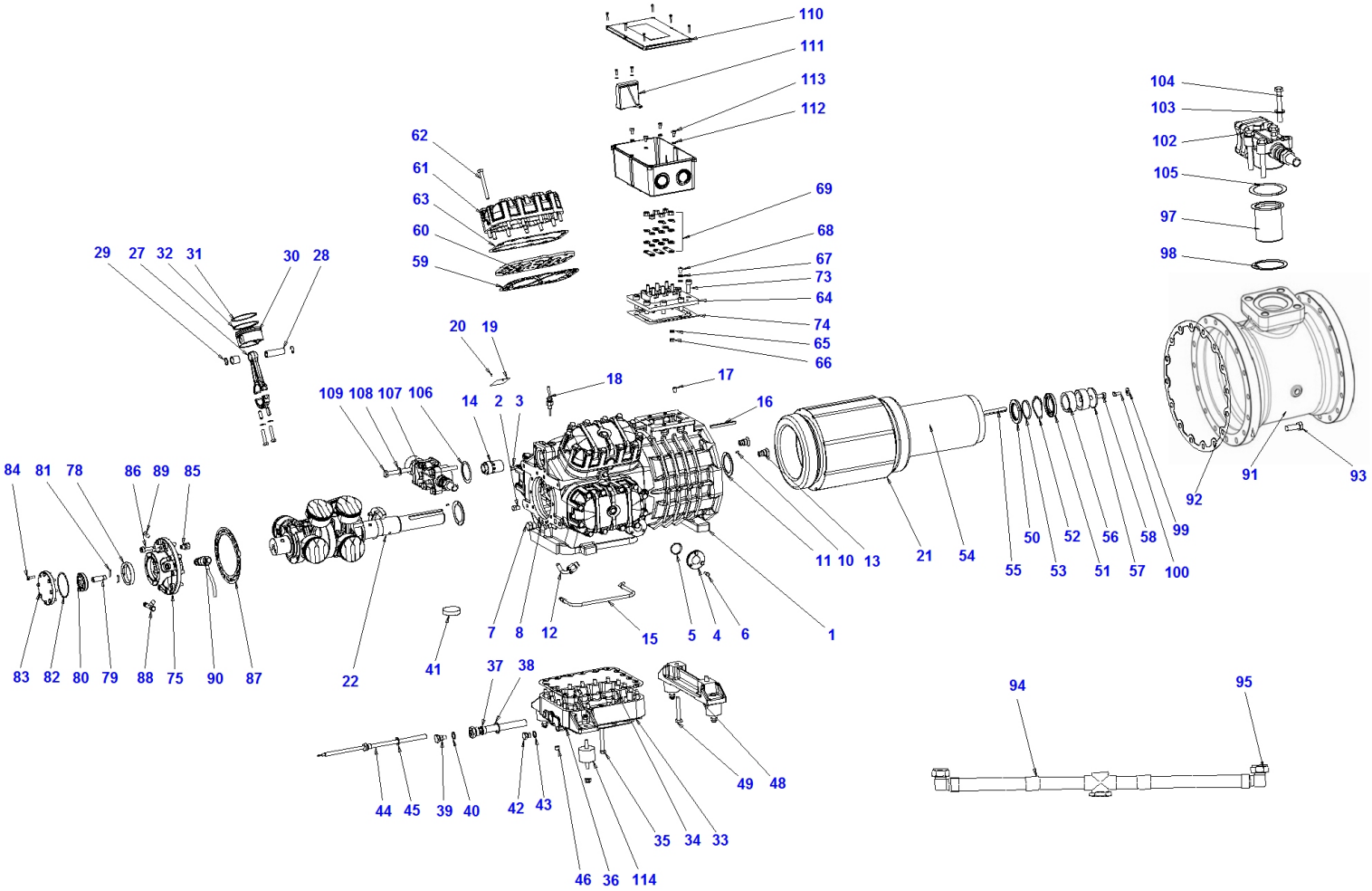

Frascold®

W 40 142 Y

Pos.	Code	Description	Quantity	Note	Notice:
1	S8401001AA	Compressor body	2		
2	S6501130	Plug 1/4 NPT	12		
3	S1251130	Plug 1/8 NPT	4		
4	SOS1	Oil sight glass	4		
5	S3131OR	O-ring for oil sight glass	4		
6	TE1006016	Screw M6x16 UNI5739	12		
7	S8601130	Plug 3/8 gas ISO 228/1	2		
8	S6501056	3/8 gas gasket	2		
9	S8701013-A	Main friction bearing	4		
10	SE1004008	Pin	4		
11	S8701011	Thrust collar	4		
12	S860A070	Oil return valve	2		
13	S860A076	Pressure regulatng valve	4		
14	S8801156	Safety relief valve	2		
15	S8701131	Internal oil pipe	2		
16	S6301063	Key 8x5x90 UNI 7510	2		
17	GR101016	Stop dowel	2		
18	EC50D	Temperatur sensor diagnose	2		
19	ML_Q	Nameplate	2		
20	RI1025035	Rivet	4		

Frascold®

W 40 142 Y

Pos.	Code	Description	Quantity	Note	Notice:
21	RS19A01	Stator 230-400 / 3 / 50 DOL	2		
21	RS19B01	Stator 400 / 3 / 50 SDS	2		
21	RS19C01L	Stator 400 / 3 / 50 PWS	2		
22	S8701002AA	Shaft	2		
23	GR100810	Stop dowel	6		
27	S8701003BB	Connecting rod	16		
28	S6301005	Piston pin	16		
29	S6301149	Circlip	32		
30	S6351004-A	Piston	16		
31	S6356001	Oil scraper ring	16		
32	S6355001	Compression ring	16		
33	S8701014AA	Bottom plate	2		
34	S8601015	Gasket for bottom plate	2		
35	TE1210075	Screw M10x75 UNI5737	34		
36	TC2210075	Screw M10x75 UNI5931	6		
37	S4501047-A	Oil strainer	2		
38	S8701056	3/4 gas gasket	2		
39	S8601130	Plug 3/8 gas ISO 228/1	2		
40	S6501056	3/8 gas gasket	2		
41	W3501128	Magnet	2		

Frascold®

W 40 142 Y

Pos.	Code	Description	Quantity	Note	Notice:
42	S1451130	Plug 1/4" gas ISO 228/1	1		
43	S1351056	Gasket	1		
44	S4601351	Sleeve for Crankase Heater	2		
45	S6501056	3/8 gas gasket	2		
46	TA1514000	Plug 1/4" NPT	2		
48	S8701018AA	Thrusting bracket	2		
49	TE1212075	Screw M12x75 UNI5737	4		
50	S8701078	Shaft thrust bearing	2		
51	S8701120	Thrust collar	2		
52	ANLMKAS72	Spring	2		
53	S4212OR	OR4212	2		
54	RR21AL	Rotor	2		
55	S4281063	Chiavetta 12x8x63 UNI 6604-69	2		
56	S8401061B	Spacer for rotor	4		
57	S8701045	Rotor washer	2		
58	TE1012040	Screw M12x40 UNI5739	2		
59	S6351031D	Gasket valve plate - body	8		
60	S6351006HH	Valve plate	8		
61	S6501007HH	Head	8		
62	TE1210090	Screw M10x90 UNI5737	104		

Frascold®

W 40 142 Y

Pos.	Code	Description	Quantity	Note	Notice:
63	S8701032	Gasket valve plate - head	8		
64	S8601040	Terminal plate	2		
65	RO1106012	Washer 6.4x12x1.6 UNI 6592	12		
66	DE2206006	Nut M6X1X6 DIN 980	12		
67	RO1106012	Washer 6.4x12x1.6 UNI 6592	4		
68	TS4006008	Screw M6x8 ISO 7045	2		
69	SK261310	Staple bars connection kit - V/Z/W NEW	2		
73	TC2710025	Screw M10x25 UNI5931	16		
74	S4501043C	Connections plate gasket	2		
75	S8601009AA	Flange	2		
76	S8701012-A	Friction bearing flange side	2		
78	S6301069	Oil pump eccentric	2		
79	S6501049	Oil pump stud	2		
80	S4951125	Oil pump gear	2		
81	S4951134	Oil pump spring	4		
82	S3300OR	O-ring for oil pump cover	2		
83	S6301067AA	Oil pump cover	2		
84	TE1006020	Screw M6x20 UNI5739	16		
85	S4951044	Oil pump safety valve	2		
86	TC2410030	Screw M10x30 UNI5931	20		

Frascold®

W 40 142 Y

Pos.	Code	Description	Quantity	Note	Notice:
87	S6501033C	Flange gasket	2		
88	RA2001030	Connection a T 1/8 NPT-1/4 Sae-1/4 Shrader	2		
89	S1251130	Plug 1/8 NPT	2		
90	EC1630DRIC	DIFF. PR. SWITCH KIT INT250	2		use EC1620RIC with DELTA P2
91	S8701010TT	Suction flange	1		
92	S8701034B	Suction flange - body gasket	2		
93	TE1212180	Screw M12x180 UNI5737	4		
94	S8501175	Oil equalization piper with sight glass	1		
95	RA6003228	Connection 90°	1		
96	RO1006024	Washer M6x24 UNI 6593	1		
97	S8601038-A	Suction strainer	1		
98	S8601055	Valve gasket	1		
99	RO1008024	Washer M8x24 UNI 6593	2		
100	TE1008014	Screw M8x14 UNI5739	2		
101	TE1006012	Screw M6x12 UNI5739	1		
102	VGS1000122	Valve	1		
103	RO1016030	Washer M16x30 UNI 6592	8		
104	TC2216140	Screw M16x140 UNI5931	8		
105	S8601055	Valve gasket	1		
106	S4501055B	Valve gasket	2		

Frascold®

W 40 142 Y

Pos.	Code	Description	Quantity	Note	Notice:
107	VGS070063	Valve	2		
108	RO1012024	Washer M12x24 UNI 6592	8		
109	TE1212085	Screw M12x85 UNI5737	8		
110	S8601039	Terminal box	2		
111	ECA11D	INT69 TML diagnose module kit	2		use ECA11D-UPG with INT 69 TM
112	RO2006011	Washer 6x10 UNI 1751A	8		
113	TS4006012	Screw M6x12 ISO 7045	8		
114	SK205060	Rubber vibration absordber kit	2		
	S635A004	Piston kit	1		
	SK103700	Valve kit	2		
	SK103920	Suction valve kit	2		
	SK132800	Connecting rod/piston kit	16		
	SK140500	Friction bearing kit	2		
	SK170100	Oil sight glass kit	4		
	SK182100	3 ph terminal box kit	2		
	SK190100	Oil strainer kit	2		
	SK210100	Oil pump kit	2		
	SK232311	Complete electric motor - 230-400 / 3 / 50 DOL	2		
	SK232312	Complete electric motor - 400 / 3 / 50 SDS	2		
	SK232313	Complete electric motor - 400 / 3 / 50 PWS	2		

W 40 142 Y

Pos.	Code	Description	Quantity	Note	Notice:
	SK261040	Electric connections kit	2		
	SK261310	Staple bars connection kit - V/Z/W NEW	2		
	SK2710	Gasket kit	1		
	SK49503	Valve plate kit	8		
	sk890100	Kit thrust collar and spring W	1		